Index

Page	Schematics Page Name
01	Cover Sheet / Revision History
02	Top Level
03	
04	
05	
06	
07	
08	
09	
10	

01_Revision_History.SchDoc

Revision History

Rev.	Rel.	Date	Author	Description	Page(s)
1.0	RC00	2017-11-07	AM	- Initial design	
1.5	RC00	2018-05-29	AM	- update	

ILD8150 Ref. Board

REF_ILD8150_DC_1.5A_SMD

V1.6

Infineon Technologies AG

PMM ACDC AE LI

Am Campeon 1-12 - 85579 Neubiberg - Germany

06/2018

<DOC_Preliminary>
<DOC_ConfidentialStatus>

LEGAL DISCLAIMER
THE INFORMATION GIVEN IN THIS DOCUMENT IS GIVEN FOR ILLUSTRATING PURPOSES ONLY. THE RECIPIENT OF THIS DOCUMENT MUST VERIFY ANY FUNCTION DESCRIBED HEREIN IN THE REAL APPLICATION. INFINEON TECHNOLOGIES HEREBY DISCLAIMS ANY AND ALL WARRANTIES AND LIABILITIES OF ANY KIND (INCLUDING WITHOUT LIMITATION WARRANTIES OF NON-INFRINGEMENT OF INTELLECTUAL PROPERTY RIGHTS OF ANY THIRD PARTY) WITH RESPECT TO ANY AND ALL INFORMATION GIVEN IN THIS DOCUMENT.

Infineon Technologies AG
PMM ACDC AE LI
Am Campeon 1-12 - 85579 Neubiberg - Germany

Title	ILD8150 Ref. Board		
Variant	REF_ILD8150_DC_1.5A_SMD	Approved	AE
Size: A3	Document Name: 01_Revision_History.SchDoc	Rel.: <Rel.>	Rev.: V1.6
Author: JD, AE			
Date: 16.09.2019 Time: 10:39:18		SVN Revision: Not in version control	

© Infineon Technologies AG 2014. All Rights Reserved.

Sheet of 2

02_Top_Level.SchDoc

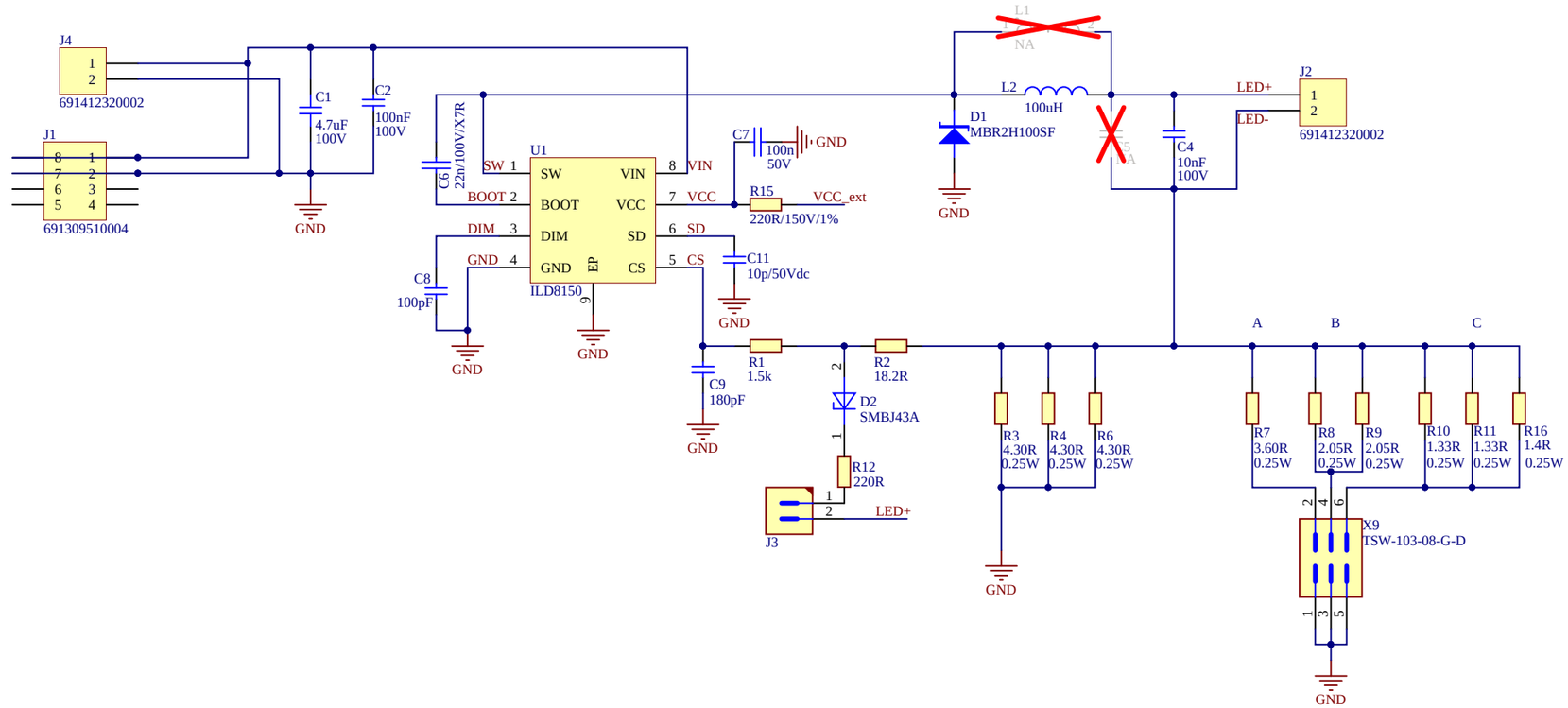

Program

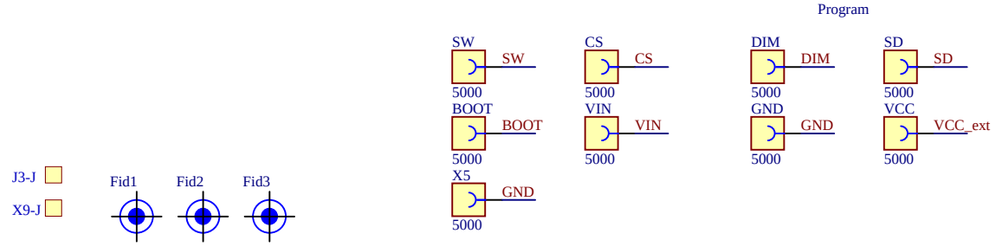

<DOC_Preliminary>
<DOC_ConfidentialStatus>

Infineon Technologies AG
PMM ACDC AE LI
Am Campeon 1-12 - 85579 Neubiberg - Germany

Title	ILD8150 Ref. Board		
Variant	REF_ILD8150_DC_1.5A_SMD	Approved	AE
Size: A3	Document Name: 02_Top_Level.SchDoc	Rel. <Rel.>	Rev. V1.6
Author: JD, AE			
Date: 16.09.2019 Time: 10:39:18	SVN Revision: Not in version control		

© Infineon Technologies AG 2014. All Rights Reserved.

Sheet of